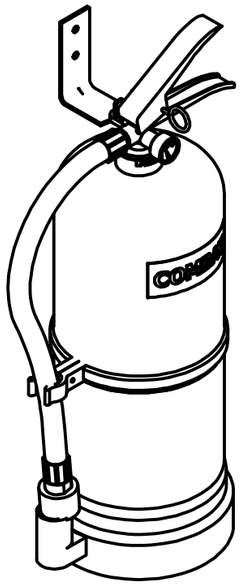

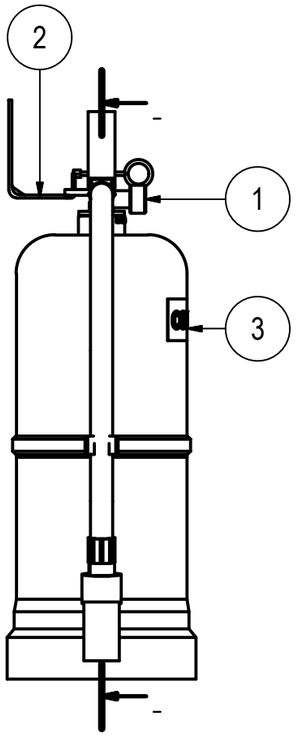

Side View

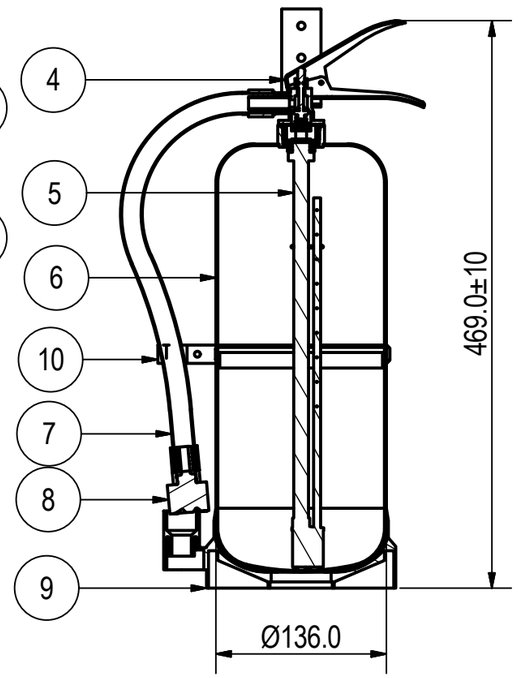

Internal View

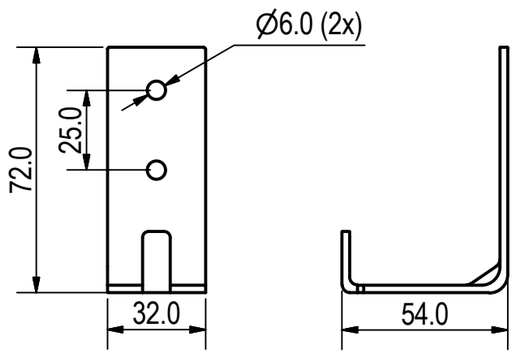

Bracket Detail

Parts List

Item	Description	Specification	Com No.	Qty.
1	Pressure Gauge	Working Temperture Range : 5 deg C To 60 deg C Working Pressure Range : 12 Bar - 15Bar - 18 Bar	-	1
2	Hook Bracket (HB-54)	Material : Mild Steel Finishing : Chrome Plated	03021600	1
3	Silkscreen Label	NA	NA	1
4	Valve Assembly (06E20)	Brass CuZn40Pb2	03013103	1
5	Rotor Unit	Adaptor Material : Brass MO58 Inlet Pipe Material : PA12 Outlet Pipe : PVC-U Rotor Material : PA12	03239745	1
6	Empty Cylinder (Volume 4.7L)	Material : JISG3141 Cold Roll Sheet, 1.5mm Thick Finishing : Red Epoxy Powder Coated Test Pressure : 27 Bar @ 30 Sec	03097803	1
7	Hose Assembly	Material : Black PP Plastic	03002504	1
8	Head Set	Material : Plastic	03239423	1
9	Plastic Skirt	Material : Polypropylene copolymer (Black) Minimum Height From Base To Cylinder : 13mm	03065700	1
10	Body Belt	Material : Polypropylene copolymer (Black)	03002700	1

Technical Specification

Description	Specification
Extinguisher Medium	2.235L(74.5%) Water + 0.75L(25%) Inilam AX + 0.015L(0.5%) AFFF 1% TP
Type of Extinguisher	Stored Pressure
Medium Chemical Analysis Requirement:	Density(g/ml) : 1.01 - 1.22 Viscosity (cm2/s) : 2.0 - 5.0 Refractive Index : 1.3 - 1.4 pH : 6 - 9
Nominal charge	3L
Max. Allowable Pressure, PS	18 Bar
Operating Pressure	15 Bar
Test Pressure, PT	27 Bar @ 30sec
Working Temperature	5 degC to 60 degC
Fire Rating	13A/55B/40F

Ordering Matrix

Com No.	Specification	Approval
20809271	BS EN3-7	TUV
20809260	SS EN3-7	TUV, SGLS (Green)

LINGJACK ENGINEERING WORKS PTE LTD
NO.1 WOODLANDS TERRACE #03-01
LINGJACK INDUSTRIAL BUILDING
SINGAPORE 738471
TEL:(65)6759 4163 FAX:(65)6758 7513
E-MAIL:COMBAT@LINGJACK.COM
WEBSITE:WWW.COMBAT.COM.SG
COMBAT

Customer : -
Project : -
Title : 3L Watermist with Additives Fire Extinguisher (C-3WMFA)
Drawing No. : 20809260
Com. No. :

This drawing contains proprietary information and should not be reproduced or use in any way without written permission from Lingjack Engineering Works Pte Ltd.

Scale : NTS
Sheet : 1/1
3rd Angle Projection :

Date	Description	Drawn	Approved	GA Rev	Pro Rev
18.10.19	Approved Drawing	Zaw Min	Lucas	00	A

The company reserves the right to change the specification without prior notice.