TABLE				
Item	Description	MATERIAL	Com. No.	Qty
1	CO2 Cylinder	Alloy Steel 34CrMo4	03004301	1
2	CO2 Valve	Copper Hpb59-1	03001501	1
3	CO2 Squeeze Lever Controllable Valve	CuZn40Pb2	03130200	1
4	Round Horn c/w 3/8" Hose Adaptor	PVC	03000404	1
5	3/8" x 6M High Pressure Hose	Rubber	03003200	1
6	Trolley c/w 16" Solid Rubber Wheel	Mild Steel	03023909	1

Technical Specification	
Description	Specification
Extinguisher Medium	CO2
Cylinder Capacity	50L
Filled Ratio, 30Kg	0.6
Working Temperature	-20 DegC To 60 DegC
Pressure At Max Operating Temperature, PTmax	147.4 Bar At 60 DegC
Maximum Allowable Pressure, PS	160 Bar
Discharge Time	64 Sec
Discharge Effective Range	2 m
Fire Rating	113B
Gross Weight	100 kg

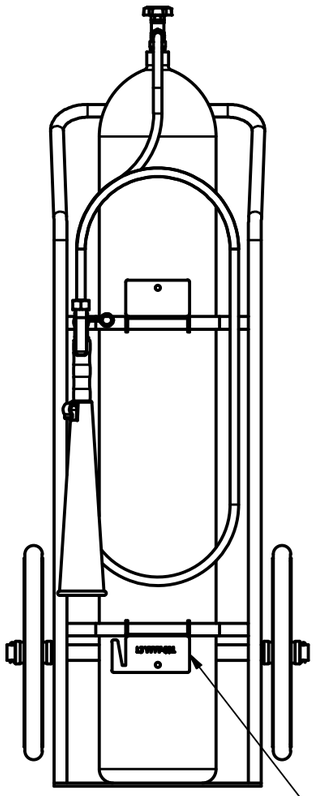

Front View

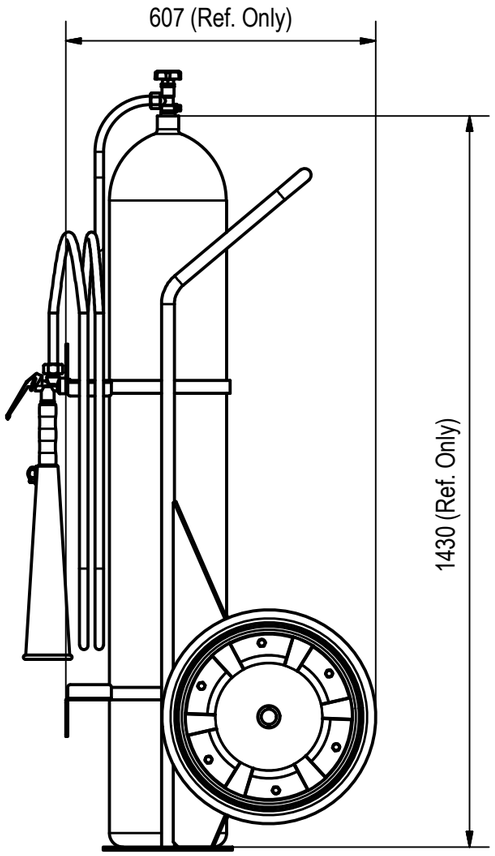

Side View

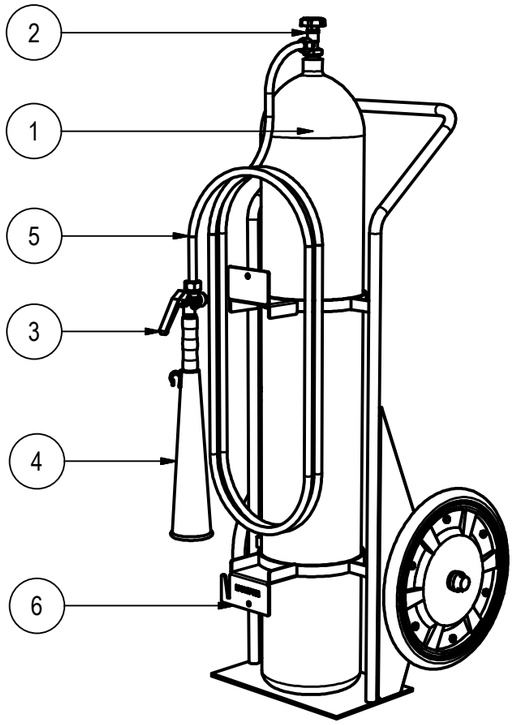

Note :
LJ = Manufacturer
YYYY = Year Of Manufacturing
001 = Batch number
PS = Max Allowable Pressure
PT = Test Pressure

Ordering Matrix		
Com No.	Specification	Approval
20802330	BS EN1866-1	LPCB
2080233000001	BS EN1866-1	SETSCO

LINGJACK ENGINEERING WORKS PTE LTD
NO.1 WOODLANDS TERRACE #03-01
LINGJACK INDUSTRIAL BUILDING
SINGAPORE 738471
TEL:(65)6759 4163 FAX:(65)6758 7513
E-MAIL:COMBAT@LINGJACK.COM
WEBSITE:WWW.COMBAT.COM.SG
COMBAT

Customer : -
Project : -
Title : 30Kg CO2 Trolley Fire Extinguisher (C-30C)
Drawing No. : 20802330
Com. No. :

This drawing contains proprietary information and should not be reproduced or use in any way without written permission from Lingjack Engineering Works Pte Ltd.

Scale : NTS
Sheet : 1/1
3rd Angle Projection :

Date	Description	Drawn	Approved	GA Rev	Pro Rev
29.9.19	Change Of PED To TPED For Cylinder And Valve.	Fung	Lucas	01	B
03.06.13	Change Of Com No. From 20802330 To 20805850 Due To Operation. All Specification Remain.	Fung	Lucas	01	A
08.10.09	Production Drawing.	Fung	Lucas	00	A

The company reserves the right to change the specification without prior notice.