PARTS LIST				
Item	Description	Material	Com No	Qty
1	SP Turn Valve	Brass HTCZ120317-1	03020004	1
2	23mm Pressure Gauge	-	03000200	1
3	Iron Safety Pin	Nickel Plated Iron	03018600	1
4	50KG Cylinder With 16in Wheel	JIS3131 Hot Roll Sheet	03067206	1
5	Powder Controllable Discharge Gun	PVC	03079204	1
6	3/4" x 6M Hose Assembly	Rubber	03003303	1
7	Syphon Tube	PVC	03104900	1

Technical Specification	
Description	Specification
Extinguisher Medium	Purple K
Working Temperature	-20 To 60DegC
Max. Allowable Pressure, PS	20 Bar
Operating Pressure	14 Bar
Discharge Time	58.3 Sec
Discharge Effective Range	10 m
Fire Rating	II B (2x21B + 233B = 275B)
Gross Weight	90 kg

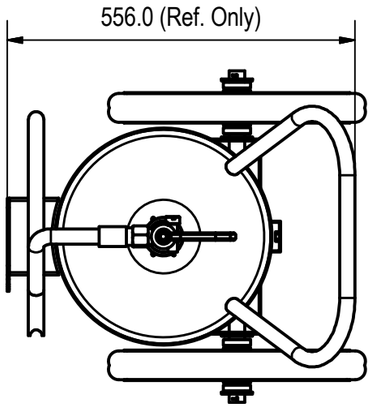

Top View

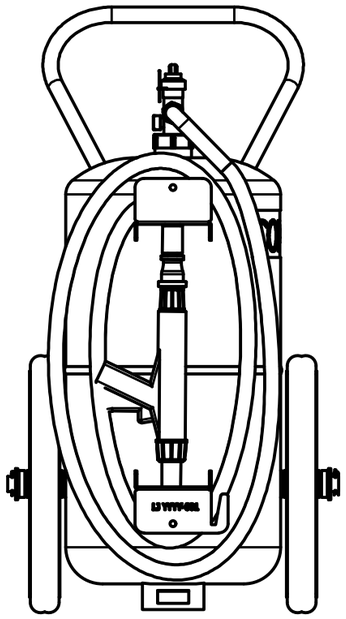

Front View

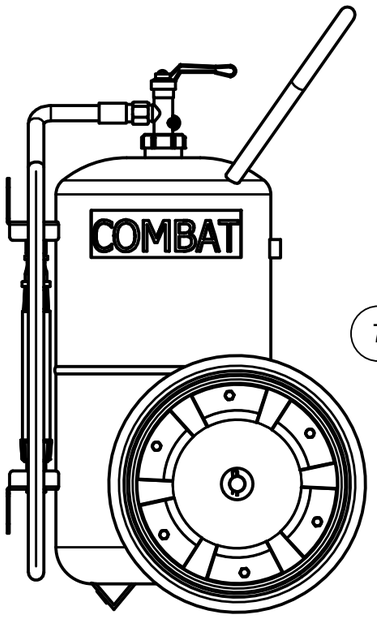

Side View

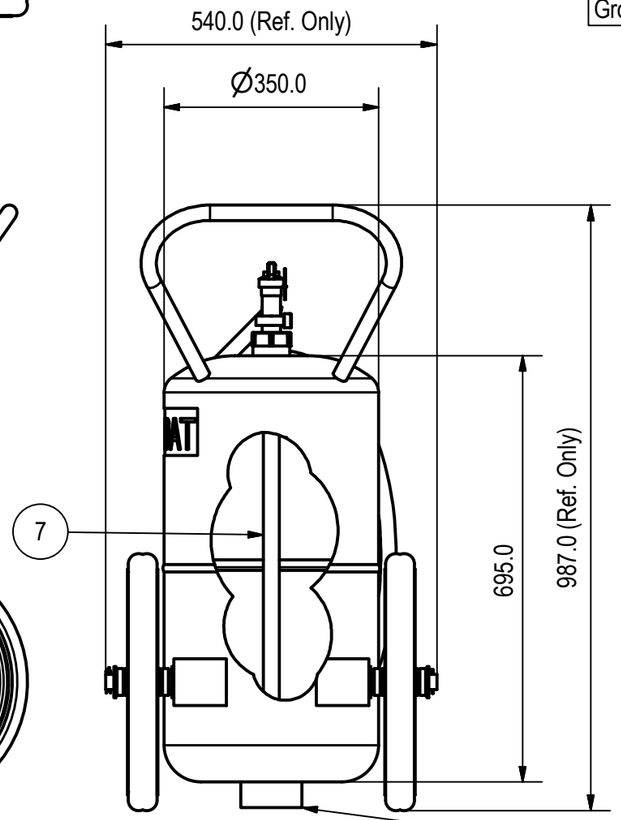

Back View

Marking :
PT 30 BAR
PS 20 BAR
WP 14 BAR
LJ YYMM-001

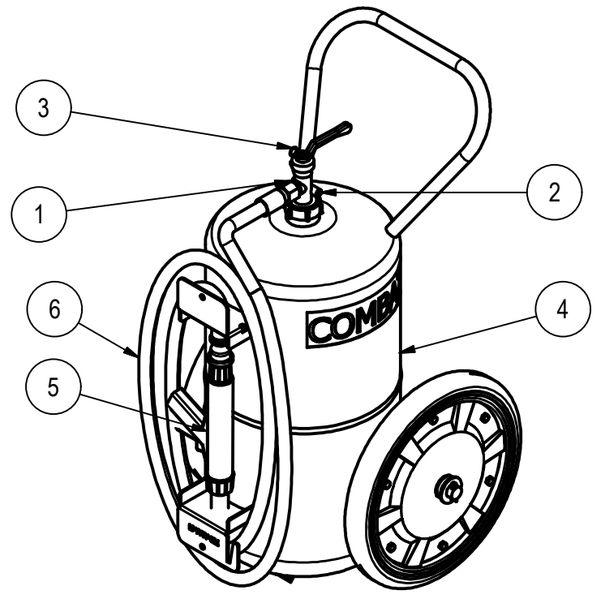

Ordering Matrix		
Com No.	Specification	Approval
21804800	BS EN1866-1	LPCB
2180480000001	BS EN1866-1	SETSCO

LINGJACK ENGINEERING WORKS PTE LTD
NO.1 WOODLANDS TERRACE #03-01
LINGJACK INDUSTRIAL BUILDING
SINGAPORE 738471
TEL:(65)6759 4163 FAX:(65)6758 7513
E-MAIL:COMBAT@LINGJACK.COM
WEBSITE:WWW.COMBAT.COM.SG

Customer : -
Project : -
Title : 50Kg Trolley Fire Extinguisher (Purple K), Stored Pressure (C-50PTP)
Drawing No. : 21804800
Com. No. :

This drawing contains proprietary information and should not be reproduced or use in any way without written permission from Lingjack Engineering Works Pte Ltd.

Scale : NTS
Sheet : 1/1
3rd Angle Projection :

Date	Description	Drawn	Approved	GA Rev	Pro Rev
19.1.19	Update Technical Specification.	ZM	Lucas	02	A
03.06.13	Change of Com No. from 21804800 to 20805650 due to operation. All Specification remain.	Fung	Lucas	01	A
20.07.11	Production Drawing.	Fung	Lucas	00	A

The company reserves the right to change the specification without prior notice.