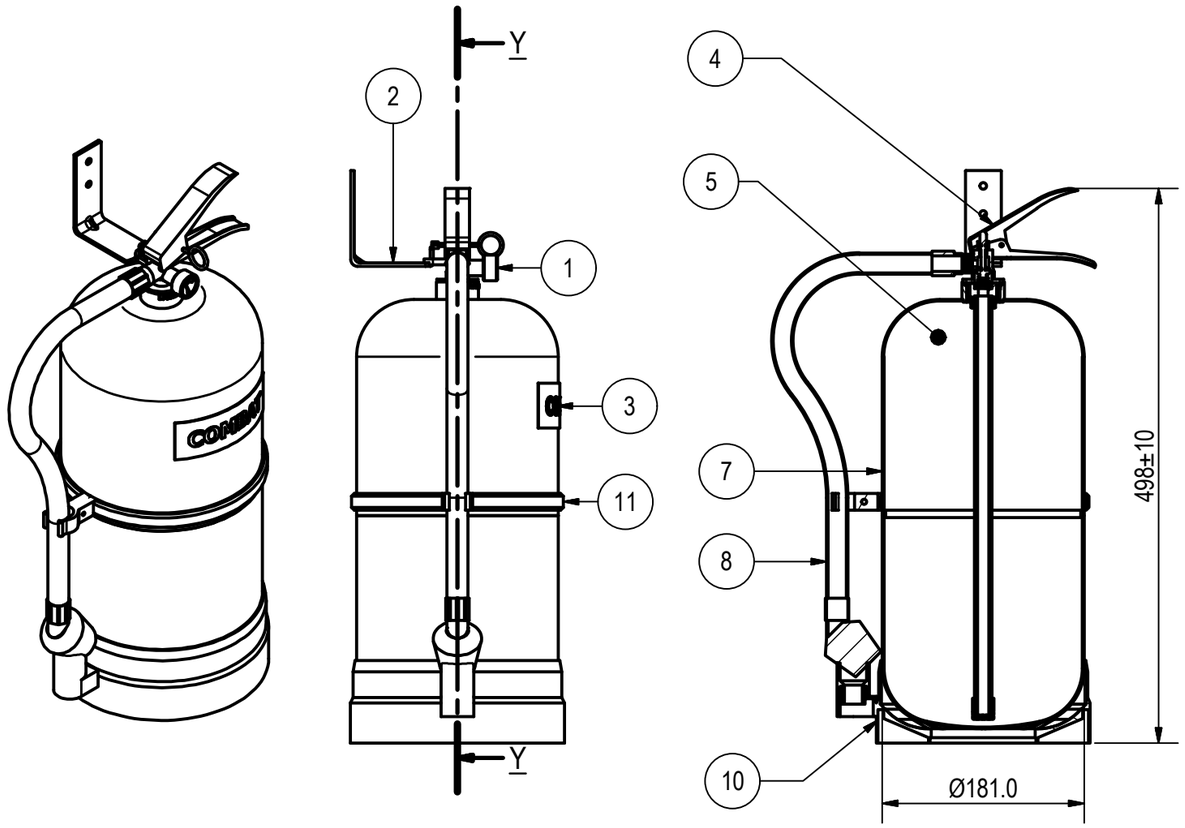

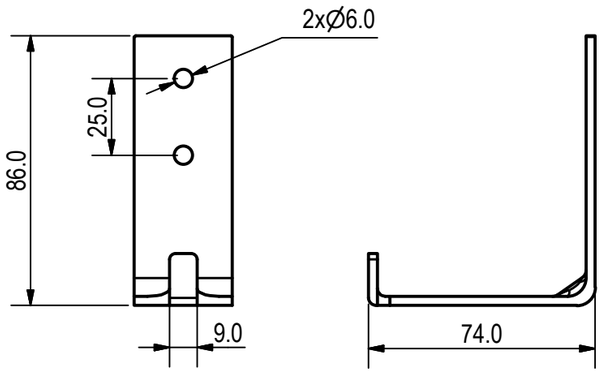

Bracket Detail

Parts List				
Item	Description	Specification	Com No.	Qty.
1	Pressure Gauge	Working Temperture Range : 5 deg C To 60 deg C	03000300	1
2	Hook Bracket	Material : Mild Steel, Min 1.5mm Thick Finishing : Chrome Plated	03021700	1
3	Silkscreen Label	NA	NA	1
4	Valve Assembly	Refer To Technical Drawing 06E20	03013103	1
5	Medium	1% Foam Additive	03011201	1
6	Syphon Tube	Material : UPVC Plastic	03152500	1
7	Empty Cylinder	Material : JISG3141 Cold Roll Sheet, 1.5mm Thick Finishing : Red Epoxy Powder Coated	03098000	1
8	Hose And Foam Nozzle	Material (Hose) : Black Braided PVC Material (Nozzle) : Black PP Plastic	03006803	1
9	Water Filter	Material : HDPE Plastic	03033100	1
10	Plastic Skirt Dia.181	Material : UPVC Plastic	03065800	1
11	Body Belt	Material : UPVC Plastic	03002800	1

Technical Specification	
Description	Specification
Working Temperature	5 deg C To 60 deg C
Working Pressure	14 Bar
Test Pressure, PT	27 Bar @ 30 Sec
Maximum Allowable Pressure, PS	18 Bar
Fire Rating	8A/13B
Gross Weight	10 Kg

Ordering Matrix			
Com No.	Brand	Approval	Remarks
20802514 00000	COMBAT	LPCB	BS EN3
20802500 00000	COMBAT	-	SS EN3

LINGJACK ENGINEERING WORKS PTE LTD
NO.1 WOODLANDS TERRACE #03-01
LINGJACK INDUSTRIAL BUILDING
SINGAPORE 738471
TEL:(65)6759 4163 FAX:(65)6758 7513
E-MAIL:COMBAT@LINGJACK.COM
WEBSITE:WWW.COMBAT.COM.SG
COMBAT

Customer : -

Project : -

Title : Foam Portable Fire Ext, Stored Pressure 6L (C-6FSE)

Drawing No. : 20802500

Com. No. :

This drawing contains proprietary information and should not be reproduced or use in any way without written permission from Lingjack Engineering Works Pte Ltd.

Scale : NTS

Sheet : 1/1

3rd Angle Projection :

Date	Description	Drawn	Approved	GA Rev	Pro Rev
07.12.11	Include Com No 20802514 For LPCB Approval.	Ken	Lucas	01	A
10.02.09	Approved Drawing	TanCP	Lucas	00	A

The company reserves the right to change the specification without prior notice.