Part List			
Item no	Description	Material	Qty
1	Jet Nozzle Head	Brass	1
2	Nozzle Tail	Brass	1
3	Stopper for 1in Jet Nozzle	Rubber	1
4	O - Ring	Nitrile 70	1
5	Spring Clip	SS304	1

Technical Specification	
Description	Specification
Flowrate	46 lpm @ 6 bar
Material	Brass
Orifice	Dia. 6mm

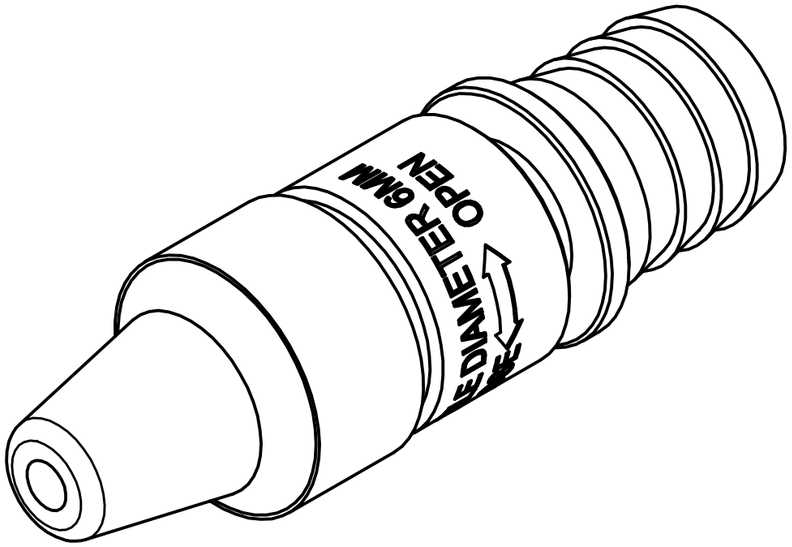

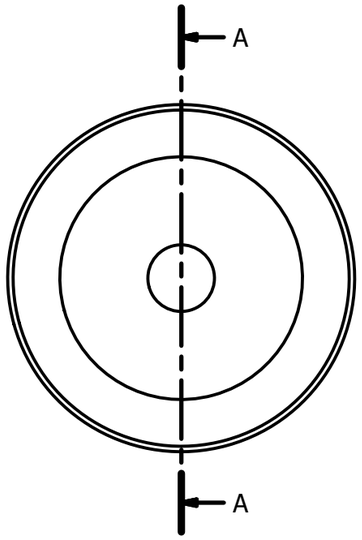

Front View

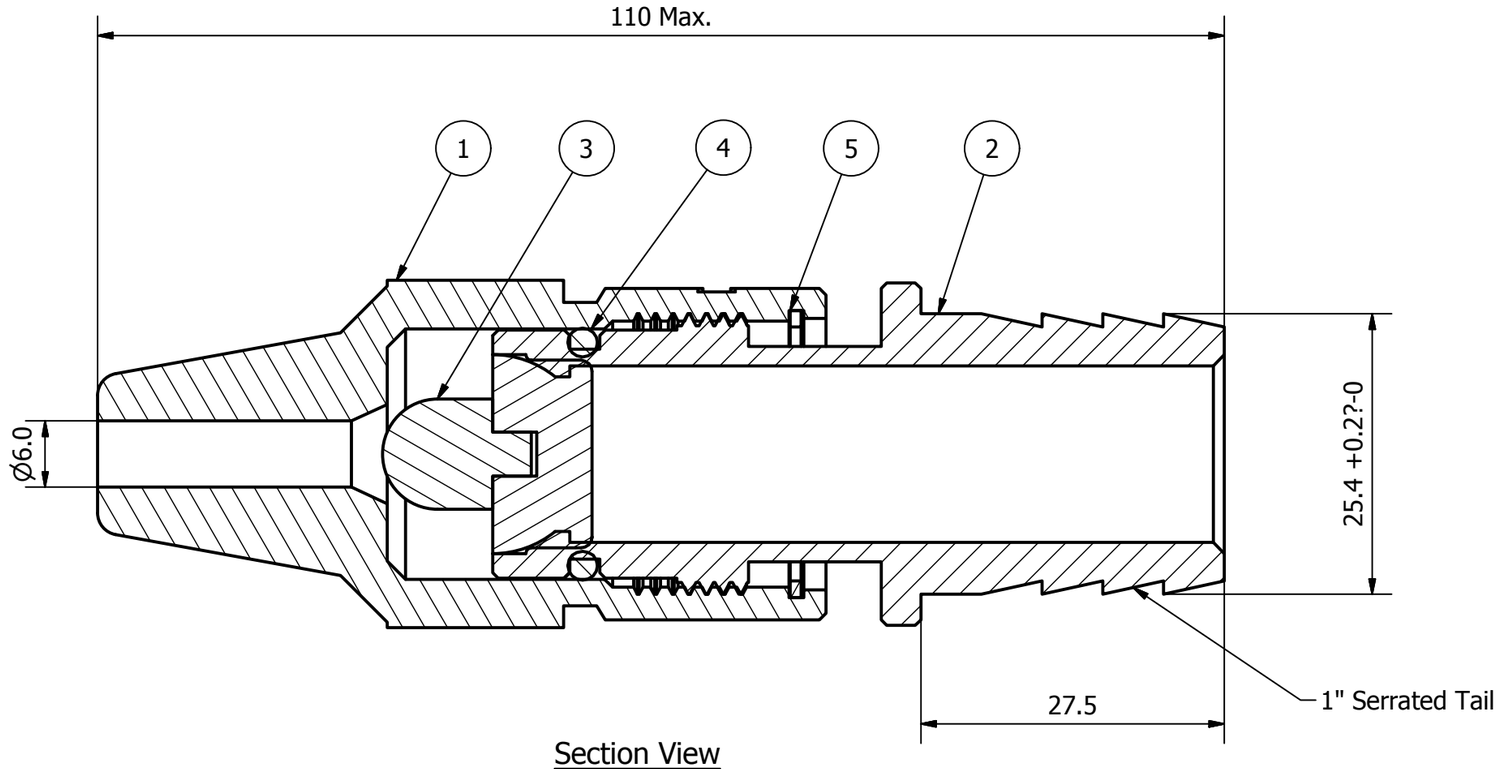

Section View

LINGJACK ENGINEERING WORKS PTE LTD
NO.1 WOODLANDS TERRACE #03-01
LINGJACK INDUSTRIAL BUILDING
SINGAPORE 738471
TEL:(65)6759 4163 FAX:(65)6758 7513
E-MAIL:COMBAT@LINGJACK.COM
WEBSITE:WWW.COMBAT.COM.SG

COMBAT

Customer : -

Project : -

Title : 1" Jet Nozzle (Model: CJ-25)

Drawing No. : 03008400

Com. No. : 0300840000000

This drawing contains proprietary information and should not be reproduced or use in any way without written permission from Lingjack Engineering Works Pte Ltd.

Scale : NTS

Sheet : 1/1

3rd Angle Projection :

Date	Description	Drawn	Approved	GA Rev	Pro Rev
23.08.12	GA Drawing.	Ken	Lucas	00	A

The company reserves the right to change the specification without prior notice.