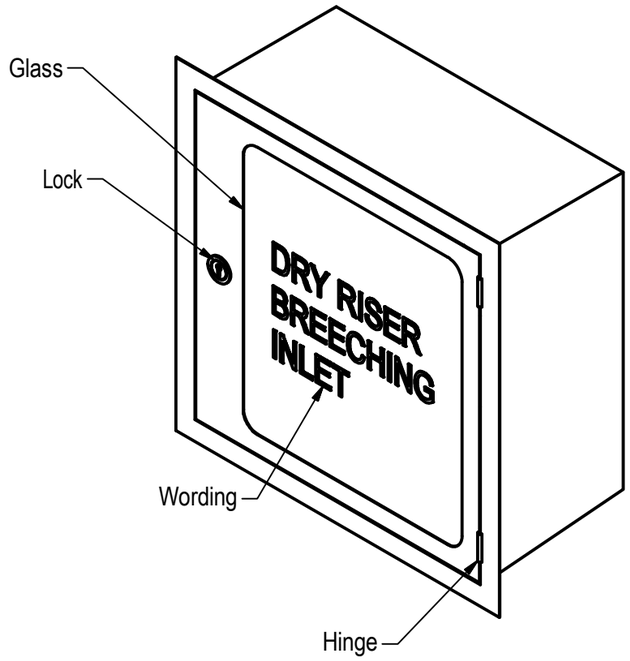

Ordering Matrix							
Com No.	Model	Wordings	Material	Butt Hinges	Lock	Glass	Finishing
70800716	C-4BR	'DRY RISER BREECHING INLET' White Arial Font	EG 1.5mm	Stainless Steel	Chrome Alloy Spring Lock	6mm Wired	Powder Coated Red RAL3000
708007162 1001	C-4BR	'DRY RISER BREECHING INLET' Red Arial Font	SS304 1.0mm	Stainless Steel	Chrome Alloy Spring Lock	6mm Wired	Hairline
708007162 1007	C-4BR	'SPRINKLER BREECHING INLET' Red Arial Font	SS304 1.0mm	Stainless Steel	Chrome Alloy Spring Lock	6mm Wired	Hairline
708007162 1002	C-4BR	'DRY RISER BREECHING INLET' Red Arial Font	SS316 1.0mm	Stainless Steel	Chrome Alloy Spring Lock	6mm Wired	Hairline
708007162 4003	C-4BR	'SPRINKLER BREECHING INLET' Red Arial Font	SS316 1.0mm	Stainless Steel	Chrome Alloy Spring Lock	6mm Wired	Hairline

Technical Specification	
Description	Specification
Gross Weight (Approx.)	15.5Kg

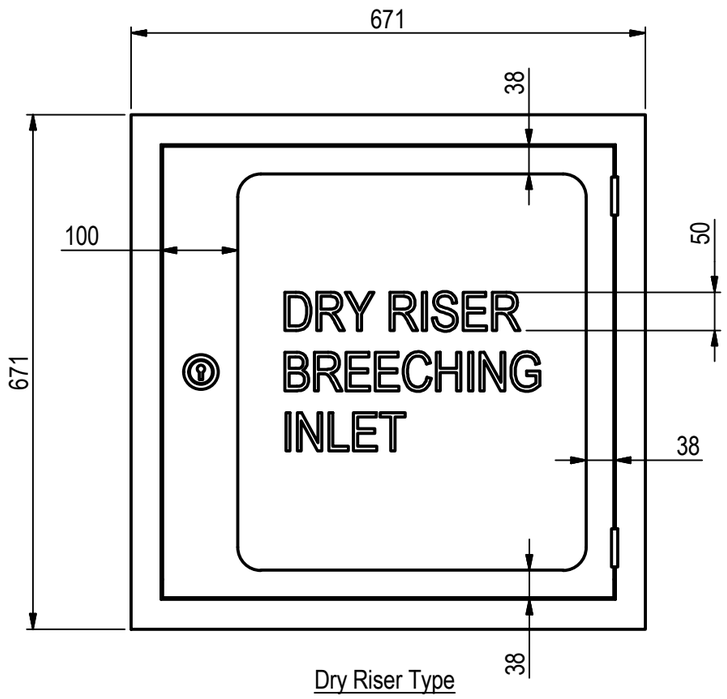

Dry Riser Type

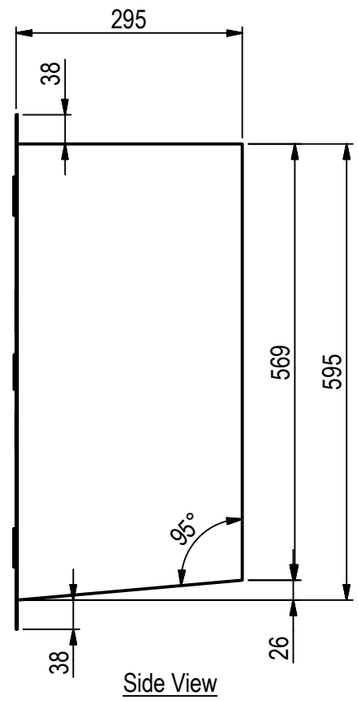

Side View

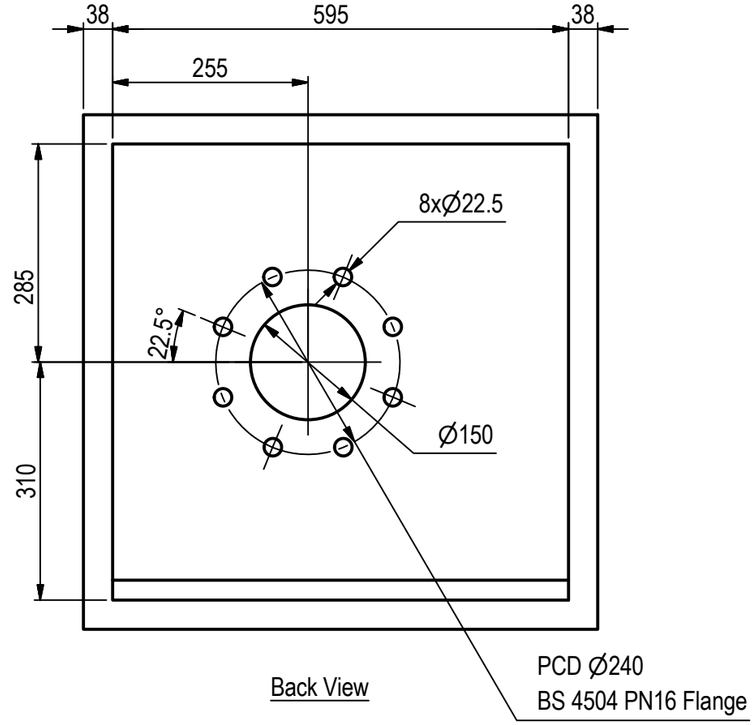

Back View

LINGJACK ENGINEERING WORKS PTE LTD
NO.1 WOODLANDS TERRACE #03-01
LINGJACK INDUSTRIAL BUILDING
SINGAPORE 738471
TEL:(65)6759 4163 FAX:(65)6758 7513
E-MAIL:COMBAT@LINGJACK.COM
WEBSITE:WWW.COMBAT.COM.SG
COMBAT

Customer : -
Project : -
Title : 4 Way Breeching Inlet Cabinet To BS 5041-5 (Recess Type)
Drawing No. : BIR4(5041)
Com. No. :

This drawing contains proprietary information and should not be reproduced or use in any way without written permission from Lingjack Engineering Works Pte Ltd.

Scale : NTS
Sheet : 1/1
3rd Angle Projection :

Date	Description	Drawn	Approved	GA Rev	Pro Rev
20.8.21	Ordering Matrix And Drawing.	Fung	Lucas	00	A

The company reserves the right to change the specification without prior notice.