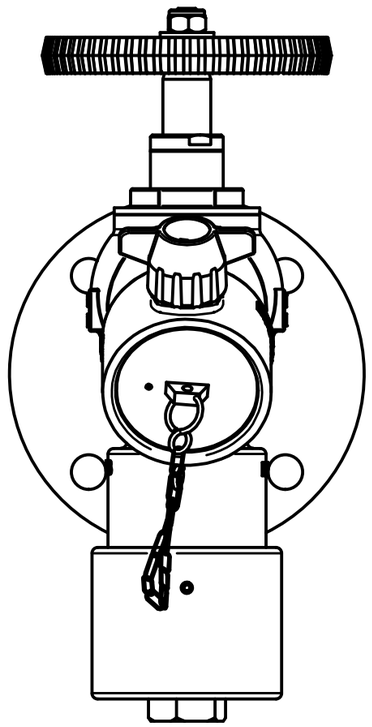

Front View

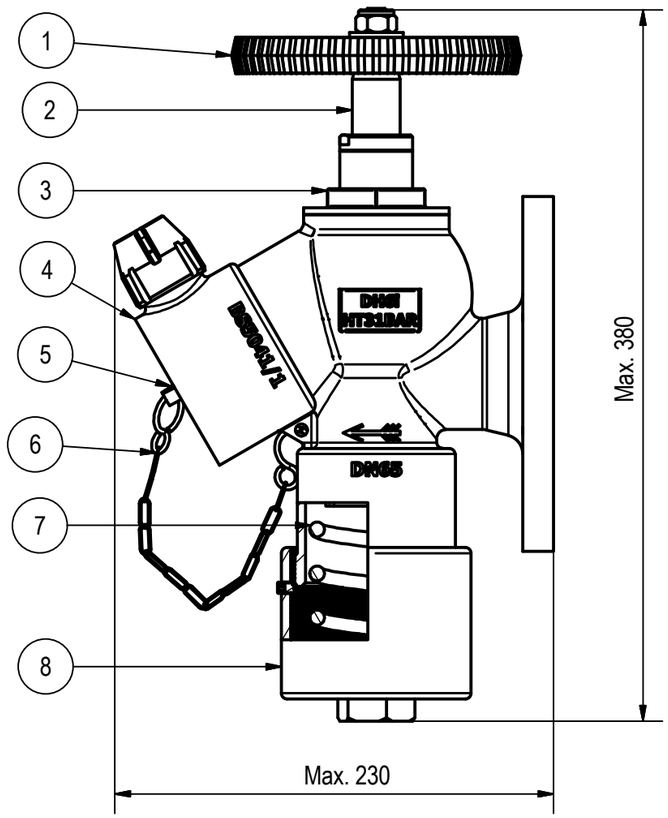

Side View

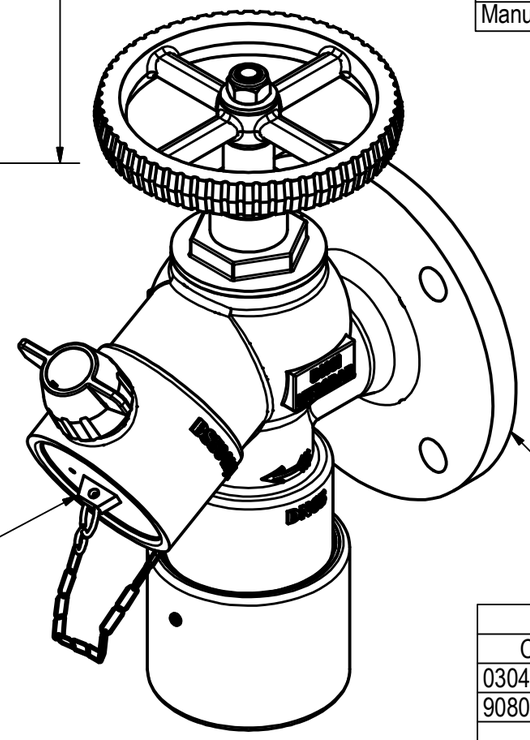

Parts List			
Item	Description	Material	Qty.
1	Hand Wheel	Cast Iron	1
2	Shut Down Spindle	CZ114	1
3	Bonnet	LG2	1
4	Valve Body c/w Inlet Connection : 2-1/2" PN16 Flange Outlet Connection : 2-1/2" BS336 Instantaneous	LG2	1
5	Blank Cap	Plastic	1
6	Chain	SS304	1
7	Spring	Carbon Steel	1
8	Adjusting Cap	CZ121	1

Technical Specification	
Description	Specification
Design Pressure	20 Bar
Seat Test Pressure	22 Bar
Body Test Pressure	30 Bar
Static Pressure Setting	7.2 Bar +/-0.5 Bar
Flow Rate	9 L/Sec (540Lpm) at 4 Bar +/-3%
Working Temperature	0 - 38 Deg Celsius
Finishing	Red
Gross Weight	13.5kg
Manufactured And High Temperature Resistance Test To	BS 5041-1 : 1987

Ordering Matrix			
Com No.	Brand	Approval	Remarks
03046404	COMBAT	LPCB	Body VB03046404.
90803200	COMBAT	LPCB	Body VB03046404, Carton Box.

LINGJACK ENGINEERING WORKS PTE LTD
NO.1 WOODLANDS TERRACE #03-01
LINGJACK INDUSTRIAL BUILDING
SINGAPORE 738471
TEL:(65)6759 4163 FAX:(65)6758 7513
E-MAIL:COMBAT@LINGJACK.COM
WEBSITE:WWW.COMBAT.COM.SG
COMBAT

Customer : -
Project : -
Title : Bib Nose PRV Flange Type (Model : DH6I)
Drawing No. : DH6i-Flange
Com. No. :

This drawing contains proprietary information and should not be reproduced or use in any way without written permission from Lingjack Engineering Works Pte Ltd.

Scale : NTS
Sheet : 1/1
3rd Angle Projection :

Date	Description	Drawn	Approved	GA Rev	Pro Rev
9.12.22	To Include Working Temperature And Material Detail.	ZhuYik	Lucas	02	A
3.6.13	Include Ordering Matrix. All Specification Remain.	Ken	Lucas	01	A
7.2007	GA Drawing.	Lee	Kenneth	00	A

The company reserves the right to change the specification without prior notice.