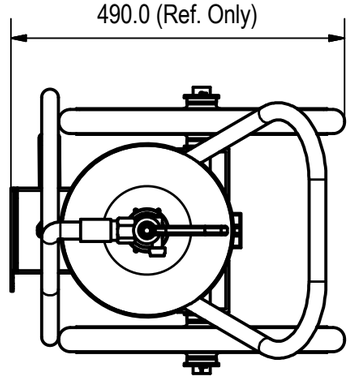


Top View

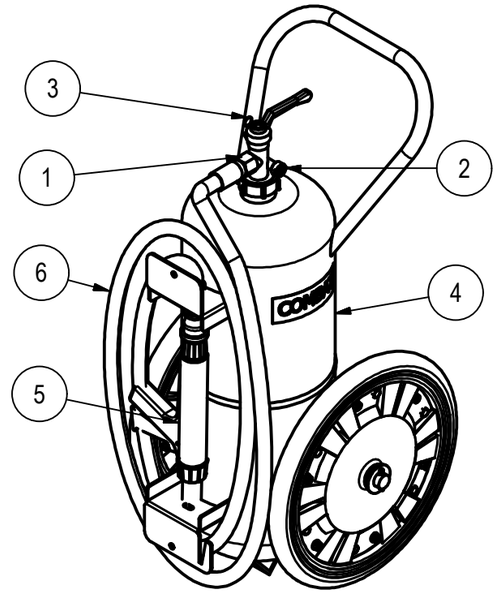


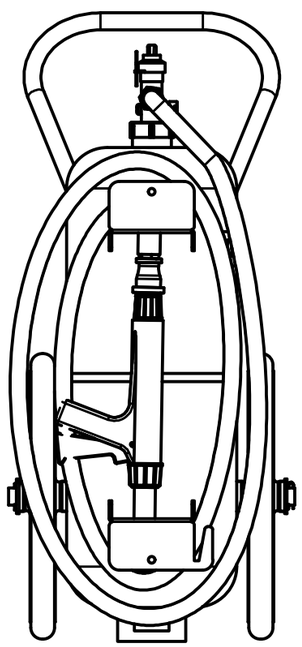

Front View

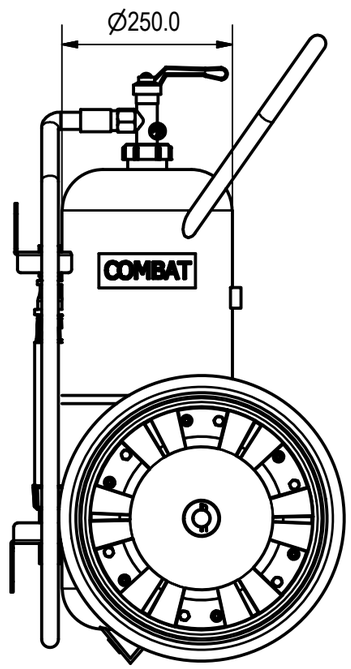


Side View

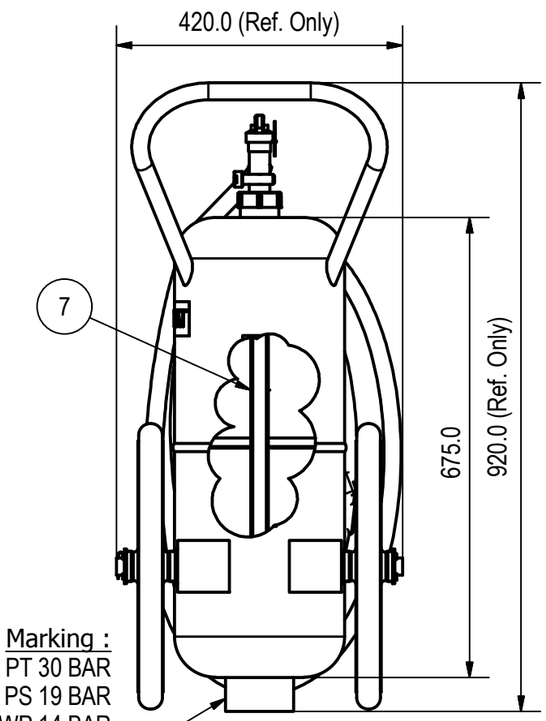


Back View

Marking :
PT 30 BAR
PS 19 BAR
WP 14 BAR
LJ YYMM-001

PARTS LIST

| Item | Description | Material | Com No | Qty |
|---|---|---|---|---|
| 1 | SP Turn Valve | Brass HTCZ120317-1 | 03020004 | 1 |
| 2 | 23mm Pressure Gauge | - | 03000200 | 1 |
| 3 | Iron Safety Pin | Nickel Plated Iron | 03018600 | 1 |
| 4 | 25KG Cylinder With 16in Wheel | JIS3141 Cold Roll Sheet 2mm Thick | 03067104 | 1 |
| 5 | Powder Controllable Discharge Gun | PVC | 03079204 | 1 |
| 6 | 3/4" x 6M Hose Assembly | Rubber | 03003303 | 1 |
| 7 | Syphon Tube | PVC | 03110200 | 2 |

Technical Specification

| Description | Specification |
|---|---|
| Extinguisher Medium | Purple K |
| Working Temperature | -20 To 60DegC |
| Max. Allowable Pressure, PS | 19 Bar |
| Operating Pressure | 14 Bar |
| Discharge Time | 30 Sec |
| Discharge Effective Range | 10 m |
| Fire Rating | II B (2x21B + 233B = 275B) |
| Gross Weight | 49 kg |

Ordering Matrix

| Com No. | Brand | Approval | Remarks |
|---|---|---|---|
| 21804700 00000 | COMBAT | LPCB | BS EN1866-1 |
| 21804700 00001 | COMBAT | TUV | BS EN1866-1 |
| | | | |
| | | | |
| | | | |
| | | | |

**LINGJACK ENGINEERING WORKS PTE LTD**
NO.1 WOODLANDS TERRACE #03-01
LINGJACK INDUSTRIAL BUILDING
SINGAPORE 738471
TEL:(65)6759 4163 FAX:(65)6758 7513
E-MAIL:COMBAT@LINGJACK.COM
WEBSITE:WWW.COMBAT.COM.SG
COMBAT

Customer : -
Project : -
Title : 25Kg Trolley Fire Extinguisher (Purple K), Stored Pressure (C-25PTP)
Drawing No. : 21804700
Com. No. :

This drawing contains proprietary information and should not be reproduced or use in any way without written permission from Lingjack Engineering Works Pte Ltd.

Scale : NTS
Sheet : 1/1
3rd Angle Projection :

| Date | Description | Drawn | Approved | GA Rev | Pro Rev |
|---|---|---|---|---|---|
| 17.08.11 | Production Drawing. | Fung | Lucas | 00 | A |

The company reserves the right to change the specification without prior notice.